# RAN

Tongue & groove

## High precision pull-down chucks Ø 160 - 400 mm

- pull-down effect of inclined master jaws
- tongue & groove master jaws
- 3 jaws

## Application/customer benefits

- 1st or 2nd operation of parts requesting close squareness and parallelism tolerances
- For chucking parts
- External clamping only

**RAN:** inclined master jaws with pull-down effect and tongue & groove

## Technical features

- Chuck only available with tongue & groove master jaws
- Clamping on raw diameters with carbide inserts, increases the pull-down effect thanks to the penetration into the work piece
- Central bore for coolant and/or air
- Chuck body and internal parts case hardened

## Standard equipment

3 jaw chuck
Mounting bolts
Grease gun

## Ordering example

3 jaw chuck RAN 200/A6
or
3 jaw chuck RAN 315/A8

## Actual gripping force diagrams

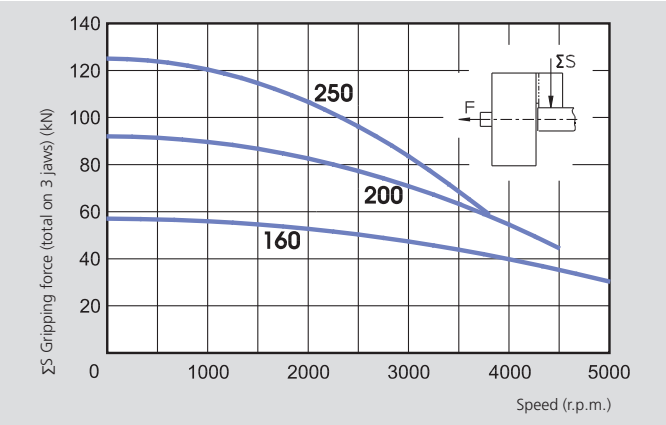


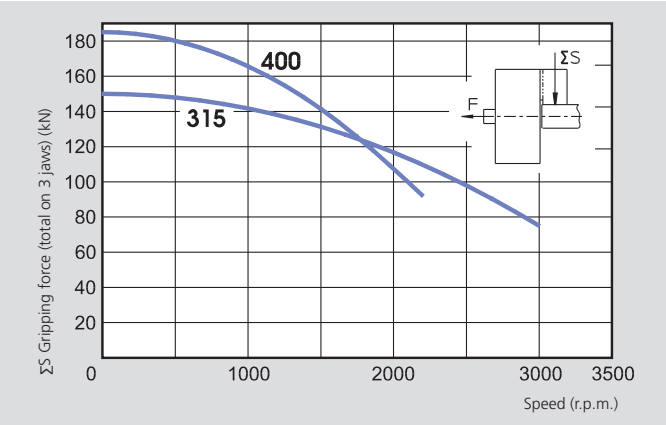


The data in the diagrams refer to 3-jaw-chucks, newly maintained according to their service manuals using SMW-AUTOBLOK K05 grease.The static and dynamic gripping forces have been measured using standard soft top jaws, placed in a position not exceeding the outer diameter of the chuck.

⚠ **Safety advice/danger of damage:**
When using taller/heavier jaws and/or clamping on a bigger diameter reduce draw pull/rotating speed accordingly.

## Technical data

| SMW-AUTOBLOK Type | | RAN 160 | RAN 200 | RAN 250 | RAN 315 | RAN 400 |
|---|---|---|---|---|---|---|
| **Number of jaws** | | 3 | 3 | 3 | 3 | 3 |
| **Radial jaw stroke** | mm | 5 | 5 | 6 | 8 | 8 |
| **Axial jaw stroke (pull-down)** | mm | 1.25 | 1.25 | 1.5 | 2 | 2 |
| **Axial piston stroke** | mm | 20 | 20 | 25 | 32 | 32 |
| **Max. draw pull** | kN | 25 | 40 | 55 | 65 | 80 |
| **Max. gripping force** | kN | 57 | 92 | 125 | 150 | 185 |
| **Max. speed** | r.p.m. | 5000 | 4500 | 3800 | 3000 | 2200 |
| **Weight** (without top jaws) | kg | 10 | 17 | 31 | 54 | 95 |
| **Moment of inertia** | kg·m² | 0.034 | 0.10 | 0.26 | 0.65 | 1.85 |
| **Top jaw reference mass** | kg | 0.58 | 0.92 | 1.25 | 2.15 | 3.6 |
| | | | | | | |
| **Recommended actuating cylinders** | | SIN-S 85/100 | SIN-S 100/125 | SIN-S 125/150 | SIN-S 125/150 | SIN-S 150/175 |

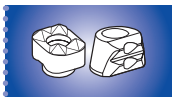
Page 310

Page 304

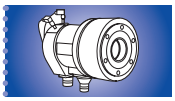
Page 217

# High precision pull-down chucks Ø 160 - 400 mm

- pull-down effect of inclined master jaws
- tongue & groove master jaws
- 3 jaws

# RAN

Tongue & groove

1

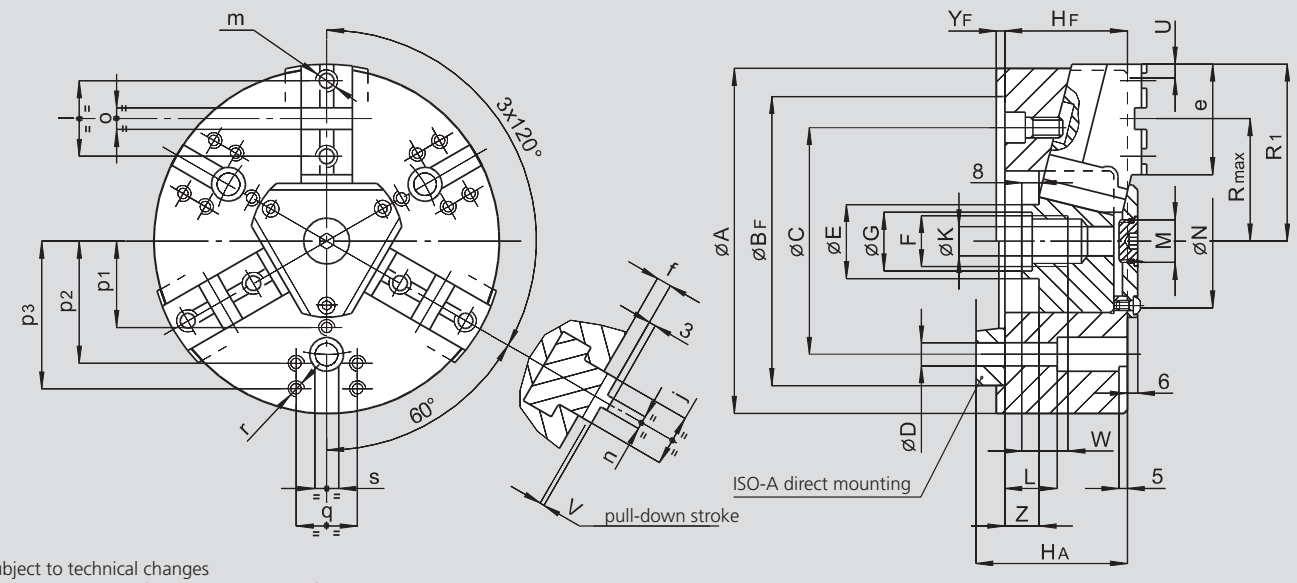


Subject to technical changes
For more detailed information please ask for customer drawing

| SMW-AUTOBLOK | Type | | RAN 160 | | RAN 200 | | RAN 250 | | RAN 315 | | RAN 400 | |
|---|---|---|---|---|---|---|---|---|---|---|---|---|
| Mounting | | | Z140 | A5 | Z170 | A6 | Z220 | A8 | Z220 | A8 | Z300 | A11 |
| | A | mm | 165 | | 203 | | 250 | | 305 | | 390 | |
| | BF H6 | mm | 140 | | 170 | | 220 | | 220 | | 300 | |
| Fixing holes circle | C | mm | 104.8 | | 133.4 | | 171.4 | | 171.4 | | 235 | |
| Fixing holes diameter | D | mm | 11.5 | | 13.5 | | 17 | | 17 | | 21 | |
| | E | mm | 32 | | 41 | | 47 | | 47 | | 66 | |
| | F | mm | M24 x 2 | | M32 x 1.5 | | M38 x 1.5 | | M38 x 1.5 | | M56 x 2 | |
| | G | mm | 25 | | 33 | | 39 | | 39 | | 57 | |
| | HF/HA | mm | 66 | 81 | 72 | 89 | 87 | 106 | 95 | 114 | 104 | 125 |
| Central through-hole | K | mm | 16 | | 18 | | 25 | | 25 | | 36 | |
| | L | mm | 13 | | 22 | | 18 | | 18 | | 54 | |
| | M | mm | M20 x 1 | | M24 x 1 | | M28 x 1.5 | | M28 x 1.5 | | M52 x 1.5 | |
| | N | mm | 75 | | 90 | | 105 | | 112 | | 145 | |
| Chuck open | R1 | mm | 85 | | 104 | | 128 | | 155 | | 198 | |
| | Rmax | mm | 56 | | 72 | | 88 | | 105 | | 133 | |
| Radial clamp. stroke | U | mm | 5 | | 5 | | 6 | | 8 | | 8 | |
| Pull-down clamp. stroke | V | mm | 1.25 | | 1.25 | | 1.5 | | 2 | | 2 | |
| | W | mm | 20 | | 25 | | 25 | | 25 | | 35 | |
| | YF | mm | 5 | | 5 | | 5 | | 5 | | 6 | |
| Axial wedge stroke | Z | mm | 20 | | 20 | | 25 | | 32 | | 32 | |
| | e | mm | 57 | | 65 | | 84 | | 103 | | 130 | |
| Chuck open | f | mm | 8.25 | | 8.25 | | 8.5 | | 9 | | 11 | |
| | j | mm | 24 | | 30 | | 36 | | 36 | | 45 | |
| | l | mm | 38 | | 44.4 | | 54 | | 63.5 | | 76.2 | |
| | m | mm | M10 | | M12 | | M16 | | M16 | | M20 | |
| | n h8 | mm | 7.94 | | 7.94 | | 12.7 | | 12.7 | | 12.7 | |
| | o H7 | mm | 12.68 | | 12.68 | | 19.03 | | 19.03 | | 19.03 | |
| | p1 | mm | - | | - | | 60 | | 65 | | 85 | |
| | p2 | mm | 65 | | 72 | | 100 | | 90 | | 120 | |
| | p3 | mm | - | | 87 | | - | | 120 | | 150 | |
| | q | mm | 36 | | 36 | | 60 | | 60 | | 80 | |
| | r | mm | M8 | | M8 | | M10 | | M10 | | M12 | |
| | s | mm | 16 | | 14 | | 16 | | 20 | | 20 | |